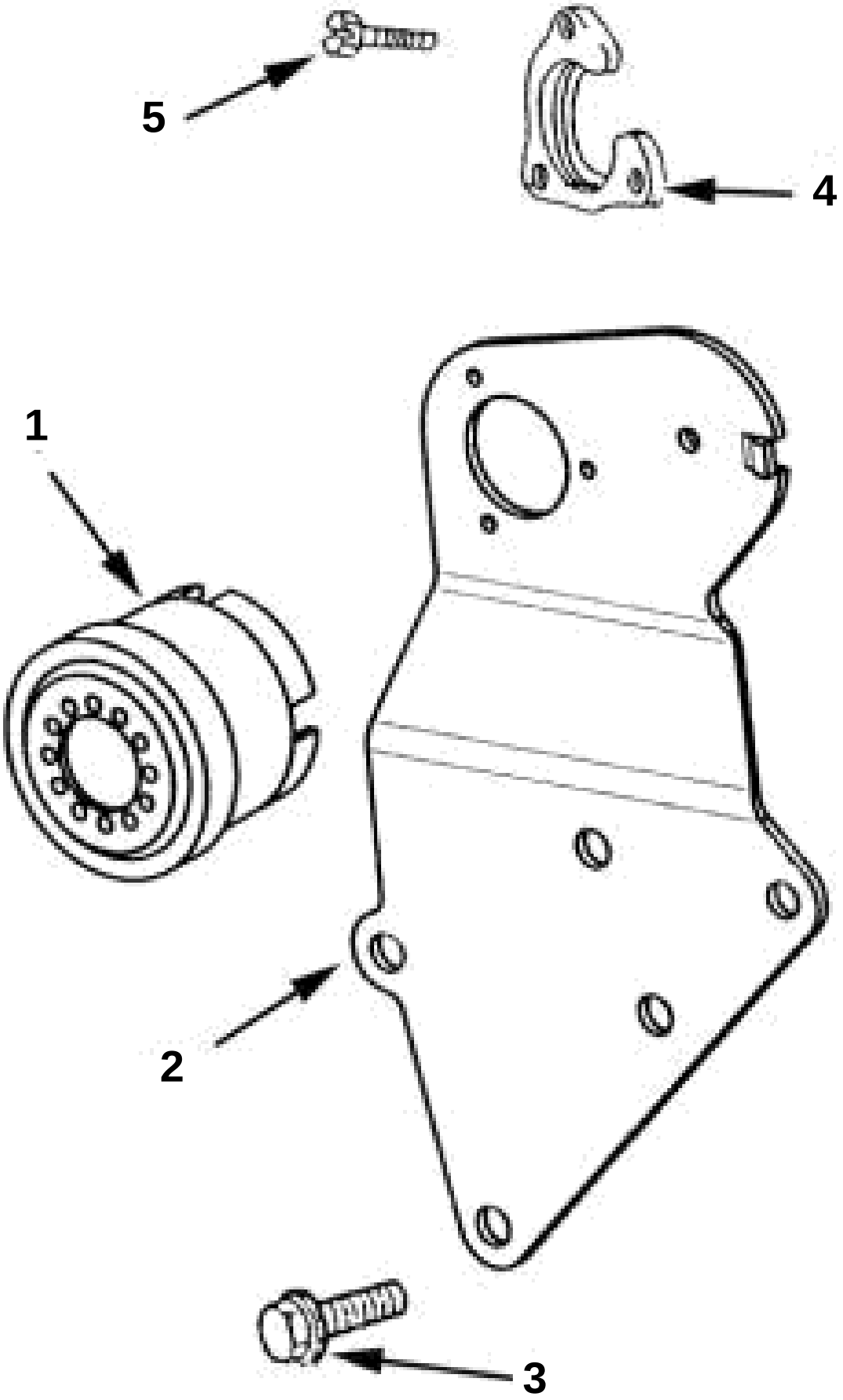
5
4
1
2
3

AUDIBLE ALARM SYSTEM

REF	PART NO.	QTY	DESCRIPTION	NOTES
1	3860264	1	Alarm	
2	3860164	1	Bracket, Alarm & 10 pin	
	965175	1	Screw, Alarm to bracket	Not shown
3	3853557	3	Screw, Alarm bracket to head	
4	3852825	1	Retainer, For 10 pin	
5	3852208	3	Screw, Retainer, engine cable end to bracket	